MICO®

Innovative Braking and Controls Worldwide

Caliper Disc Brakes

for applications requiring
static and/or dynamic braking

Spring Apply, Hydraulic Apply,
and Mechanical Apply Brakes

Why choose MICO?

MICO, Inc. designs, manufactures and markets hydraulic components, controls, and brake systems primarily for off-road markets. We have manufacturing facilities in:

- North Mankato, Minnesota U.S.A.
- Ontario, California U.S.A.
- Empalme, Sonora, Mexico

Many of the world's largest off-highway OEMs value the knowledgeable staff at MICO and work with us to make their products better. Our custom-engineered products are designed with the customer requirements as the primary driver. It is our intent to help customers build their systems with our expertise in hydraulic components, braking systems and controls.

Our goal is to meet or exceed our customers' expectations in every aspect of our business.

Product lines we specialize in include:

- Actuators
- Brake Locks
- Brakes
- Controls
- Cylinders
- Electrohydraulics
- Master Cylinders
- Valves

MICO is proud to be ISO 9001 and ISO 14001 certified and continuously strive for improvement while remaining a quality leader in our field. We have been a successful business for over 60 years. Privately owned, customer driven. We look forward to working with you!

MICO®

Caliper Disc Brakes

MICO® Caliper Disc Brakes are extensively tested to assure that our customers are receiving a high quality product. MICO uses only high grade materials in the construction of caliper disc brakes. Computer technology is employed in the analysis and selection of component parts.

The MICO® Caliper Disc Brake line is divided into the following series:

515 Series are a floating caliper type and are available in spring apply, hydraulic apply or mechanical apply models.

520 Series are fixed caliper disc brakes, hydraulic apply with opposed piston.

530 Series are a floating caliper type and are available in spring apply or hydraulic apply models.

The 515 Series caliper brakes can be used for limited dynamic or service braking as well as static or parking brake applications. The Spring Apply/Hydraulic Release designs use a stack of belleville springs to apply the brake and hydraulic pressure from a source such as a master cylinder to release the brake. The Mechanical Apply designs use a mechanical lever and cam system to apply and release the brake.

The 520 Series caliper brakes are used in service braking applications. The Hydraulic Apply Caliper Brakes use a modulated hydraulic pressure source, such as a master cylinder, to control brake torque. These brakes are available with various diameter actuation pistons. The larger the piston the greater the capacity for clamping force.

The 530 Series Spring Apply/Hydraulic Release Caliper Brakes are used in parking brake applications. They use a stack of belleville springs to apply the brake and hydraulic pressure to release the brake. Designed to be either on-or-off, conventional master cylinder actuation is not recommended to hydraulically release the brake. For hydraulic release actuation, refer to the MICO Hydraulic Remote Actuators catalog (Form No. 84-460-001). The 530 Series Hydraulic Apply Caliper Brakes are designed for use in dynamic or service braking and use a modulated hydraulic pressure source, such as a master cylinder.

Most types of MICO® Caliper Disc Brakes are available with seals and rubber components for use with automotive brake fluids, mineral base hydraulic oil, or special fluids. Consult MICO, Inc. for recommendations. All lining material used in the MICO® Caliper Disc Brakes is non-asbestos and lead free.

Complete the appropriate Application Data Sheet online, www.mico.com. The MICO Applications Department will analyze your specifications and based on your input recommend a caliper disc brake suitable for your requirements.

Catalog Index

Why choose MICO 2
Recommended Disc Material 3
515 Series Brakes
- Spring Apply 4-5
- Mechanical Apply 6
- Hydraulic Apply 7

520 Series Brakes 8-12
530 Series Brakes
- Spring Apply (3000 lb) 13
- Spring Apply (6000 lb) 14
- Spring Apply (9000 lb) 15
- Hydraulic Apply 16

Useful Formulas 17
Conversion Factors 18-19

NOTE

Torque curves and torque formulas in this catalog are based on static and dynamic lining coefficients of friction under properly adjusted, fully burnished, lining conditions and are theoretical in nature. Maximum torque will be achieved only after the brake has been properly burnished. Consult MICO, Inc. for Technical Notice (Form No. 81-950-016).

Recommended Disc Material

High quality brake discs should be used in conjunction with MICO Caliper Disc Brakes. Depending on strength and performance requirements, low to medium carbon steel is generally recommended. Fabrication procedures are as follows:

1. Flame cut or machined to required outside diameter with inside diameter machined to size.
2. Stress relieved after all machining operations.
3. Blanchard ground to a surface finish of 54 Ra to 72 Ra with a visible crosshatch pattern.
4. Surfaces to be parallel within 0.002 inch.
5. Surfaces to be flat within 0.005 inch.

This document is intended to provide general information about MICO Products. MICO, Inc. has attempted to present accurate information about MICO Products in its catalogs, brochures, and other printed materials. MICO, Inc. is not responsible for errors, inaccuracies, or inconsistencies that may exist in any catalog brochure or other printed materials or any damages arising from or related to reliance on information in them. Materials and specifications for MICO Products set forth in catalogs, brochures, and other printed materials are subject to change without notice or obligation. Refer to www.mico.com for the most recent versions of our literature. If you have any questions concerning MICO Products, please contact MICO, Inc. All MICO Products and service are sold and provided subject to the MICO Warranty at www.mico.com in effect on the date of sale or supply.

Applications

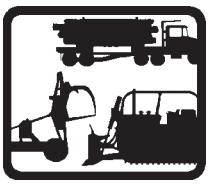

Forestry Equipment

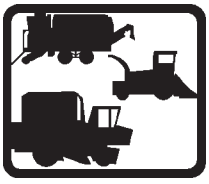

Agricultural Equipment

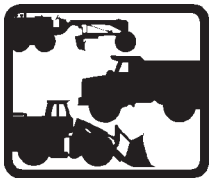

Heavy Construction Equipment

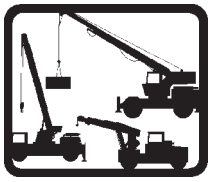

Swing Boom Equipment

Mining Equipment

In-Plant & Warehouse Equipment

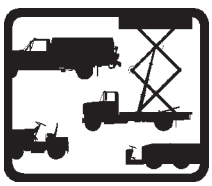

Airport Support Vehicles

515 Series Caliper Disc Brake

(spring apply)

Model Numbers

Brake Fluid	Hydraulic Oil
02-515-005	02-515-002
* 02-515-119	02-515-004
	02-515-006
	02-515-008
	* 02-515-012
	* 02-515-020
	** 03-515-014
	** 03-515-016
	** 03-515-018

* Includes a rubber boot

** Includes a rubber boot and no. 4 SAE o-ring boss swivel fitting.

DESCRIPTION

Floating caliper type brake, spring applied, hydraulic release. Spring apply brakes are independent of outside energy sources such as air, hydraulic or mechanical forces. The stored energy is provided by a series of belleville springs.

Under normal conditions, the brake is installed independent of the service brake system. Ideal for industrial machines and mobile equipment applications.

These brakes are designed to operate as parking and/or emergency brakes. If your application requires rapid cycling consult MICO, Inc. for recommendations.

Consult MICO Applications Department for other models.

See page 5 for disc diameter-vs-brake torque ratio charts.

SPECIFICATIONS

- **Disc diameter:** 6 inch to unlimited
- **Disc thickness:** 0.50 inch - for other disc thicknesses contact MICO, Inc.
- **Total lining contact area:** 6.36 inch^2
- **Continuous duty pressure:** 2000 PSI
- **Intermittent duty pressure:** 2500 PSI
- **Full retraction volume:** 0.20 inch^3 maximum
- **Caliper material:** ductile iron
- **Caliper finish:** zinc chromate yellow
- **Lining thickness:** 0.22 inch
- **Usable lining thickness:** 0.22 inch
- **Lining material:** non-asbestos, lead free
- **Porting:** No. 4 SAE o-ring port per SAE J1926/1: 7/16-20
- **Approximate weight:** 4.2 lb

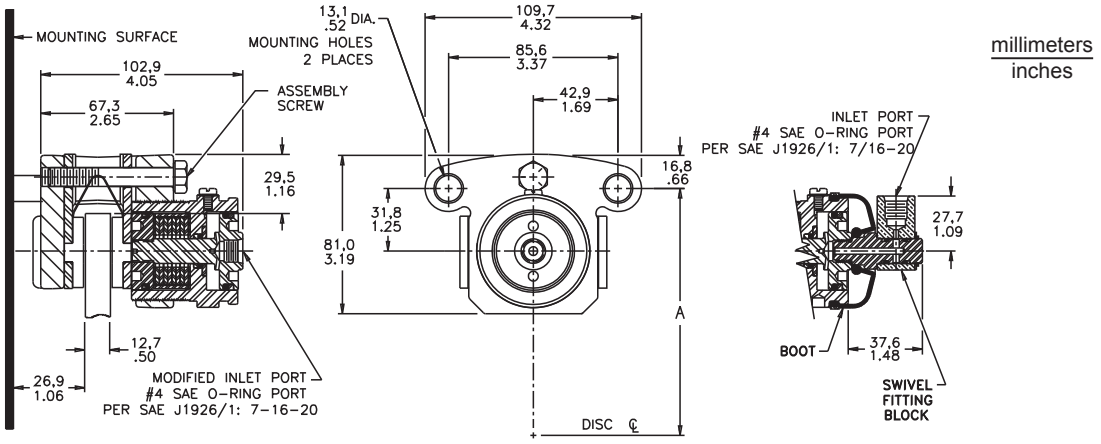

NOTES:

1. Model 02-515-002 shown, dimensions will vary slightly between units and are to be used for reference purposes only.
2. Disc rubbing speed not to exceed 5000 ft/min if brake is used dynamically.
3. Mounting bolts not included.

"A" dimension = Disc Radius + $\frac{9,7}{0.38}$

Model: 02-515-002

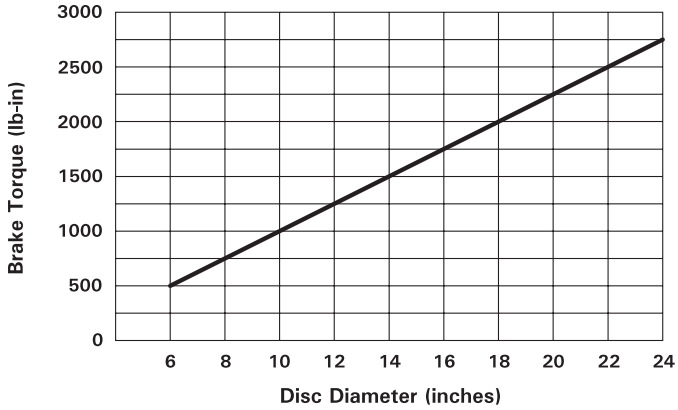

TORQUE FORMULA (Bt = Brake Torque)
Bt = 250 x (Disc Radius – 1.00)
Complete Retraction Pressure: 300 PSI

Models: 02-515-004, 03-515-014

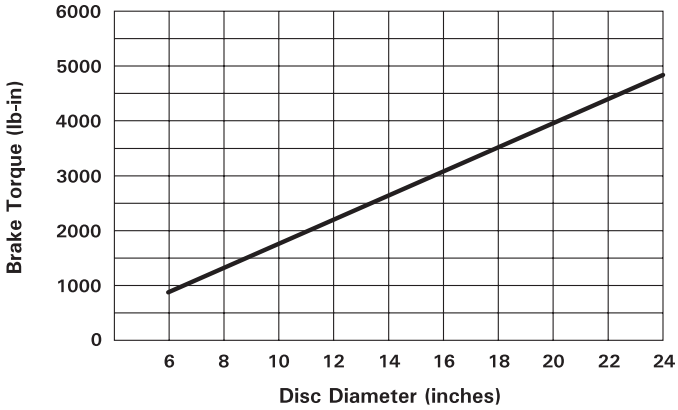

TORQUE FORMULA (Bt = Brake Torque)
Bt = 440 x (Disc Radius – 1.00)
Complete Retraction Pressure: 600 PSI

Models: 02-515-012, 02-515-119

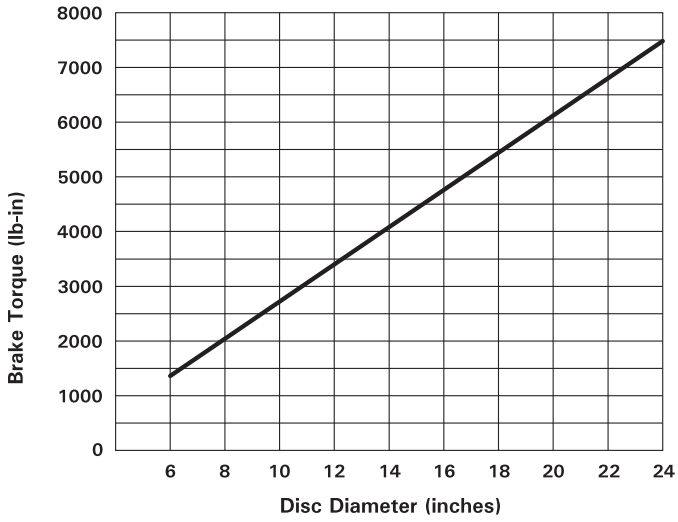

TORQUE FORMULA (Bt = Brake Torque)
Bt = 680 x (Disc Radius – 1.00)
Complete Retraction Pressure: 700 PSI

Models: 02-515-008, 02-515-020, 03-515-018

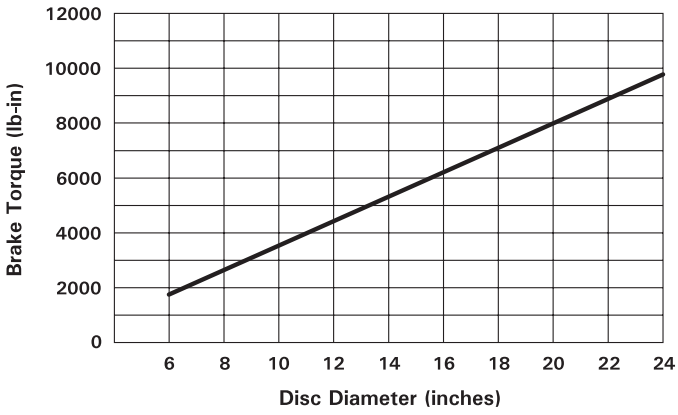

TORQUE FORMULA (Bt = Brake Torque)
Bt = 900 x (Disc Radius – 1.00)
Complete Retraction Pressure: 1200 PSI

Models: 02-515-005, 02-515-006, 03-515-016

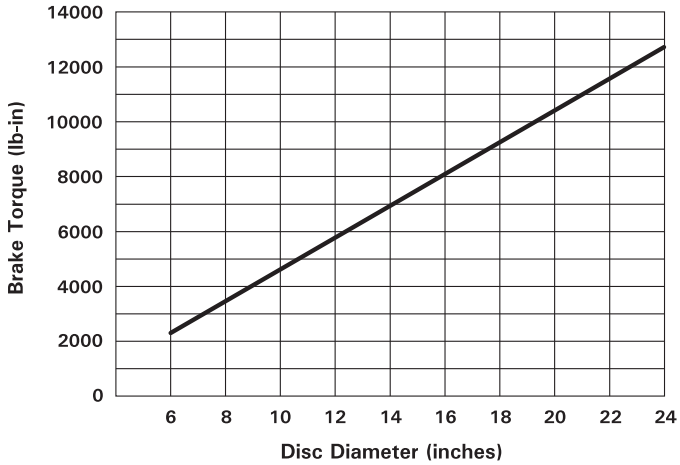

TORQUE FORMULA (Bt = Brake Torque)
Bt = 1150 x (Disc Radius – 1.00)
Complete Retraction Pressure: 1700 PSI

NOTE: Maximum torque achieved only after brake has been properly adjusted and burnished, see Technical Notice (Form No. 81-950-016).

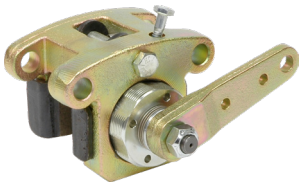

515 Series Caliper Disc Brake

(mechanical apply)

Model Numbers

02-515-148
02-515-150

SPECIFICATIONS

- **Disc diameter:** 6 inch to unlimited
- **Disc thickness:** 0.50 inch - for other disc thicknesses contact MICO, Inc.
- **Total lining contact area:** 6.36 inch^2
- **Caliper material:** ductile iron
- **Caliper finish:** zinc chromate yellow
- **Lining thickness:** 0.22 inch
- **Usable lining thickness:** 0.22 inch
- **Lining material:** non-asbestos, lead free
- **Lever movement:** 40° either direction
- **Lever pull:** limited to 330 lb at hole ▽2
  limited to 420 lb at hole ▽1
- **Approximate weight:** 4.7 lb

DESCRIPTION

Floating caliper type brake, mechanically applied. One piece carrier. Once brake is adjusted, the lever can be mounted in any position. Ideal for secondary, emergency, and industrial applications.

Consult MICO Applications Department for other models.

Chart is based on using hole ▽2

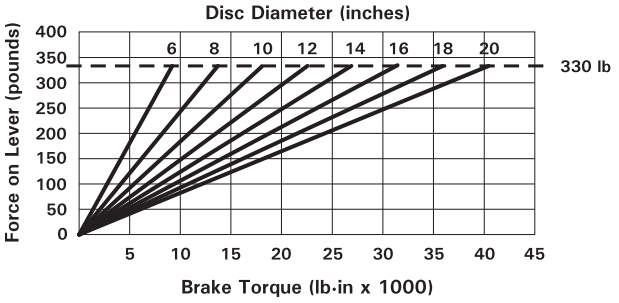

TORQUE FORMULA (Bt = Brake Torque)

Bt = 10.69 x Lever Pull x (Disc Radius – 1.00) for hole ▽1

Bt = 13.61 x Lever Pull x (Disc Radius – 1.00) for hole ▽2

NOTE: Maximum torque achieved only after brake has been properly adjusted and burnished, see Technical Notice (Form No. 81-950-016).

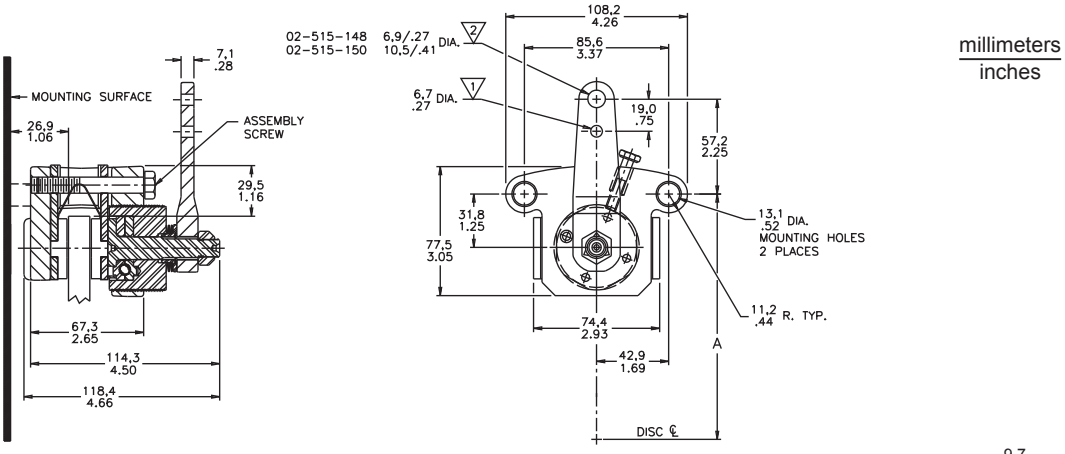

NOTES:

1. Model 02-515-150 shown, dimensions will vary slightly between units and are to be used for reference purposes only.
2. Disc rubbing speed not to exceed 5000 ft/min if brake is used dynamically.
3. Mounting bolts not included.

515 Series Caliper Disc Brake

(hydraulic apply)

Model Numbers

Brake Fluid	Hydraulic Oil
02-515-025	02-515-030

DESCRIPTION

Floating caliper, hydraulic apply type. Designed to provide braking for applications in the agricultural, construction, mining, and logging industries. High strength aluminum piston and module assembly.

Consult MICO Applications Department for other models.

SPECIFICATIONS

- **Disc diameter:** 6 inch to unlimited
- **Disc thickness:** 0.50 inch - for other disc thicknesses contact MICO, Inc.
- **Total lining contact area:** 6.36 inch^2
- **Continuous duty pressure:** 1500 PSI
- **Intermittent duty pressure:** 2000 PSI
- **Actuating volume:** 0.05 inch^3 nominal
- **Caliper material:** ductile iron
- **Caliper finish:** zinc chromate yellow
- **Lining thickness:** 0.22 inch
- **Usable lining thickness:** 0.22 inch
- **Lining material:** non-asbestos, lead free
- **Piston diameter:** 1.50 inch
- **Approximate weight:** 3.8 lb
- **Porting:** 1/8-27NPTF

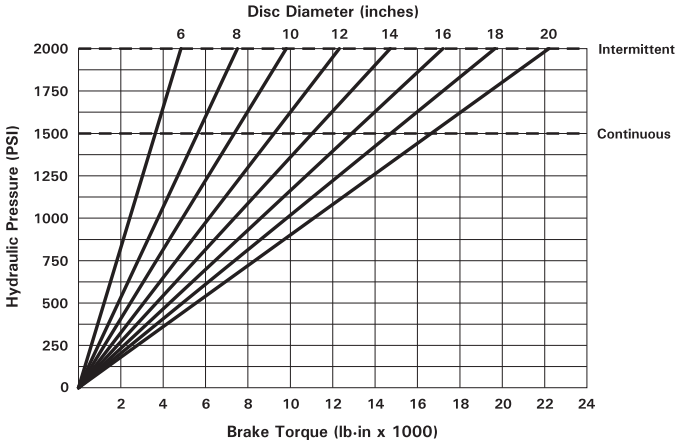

TORQUE FORMULA (Bt = Brake Torque)
Bt = PSI x 1.23 x (Disc Radius – 1.00)

NOTE: Maximum torque achieved only after brake has been properly adjusted and burnished, see Technical Notice (Form No. 81-950-016).

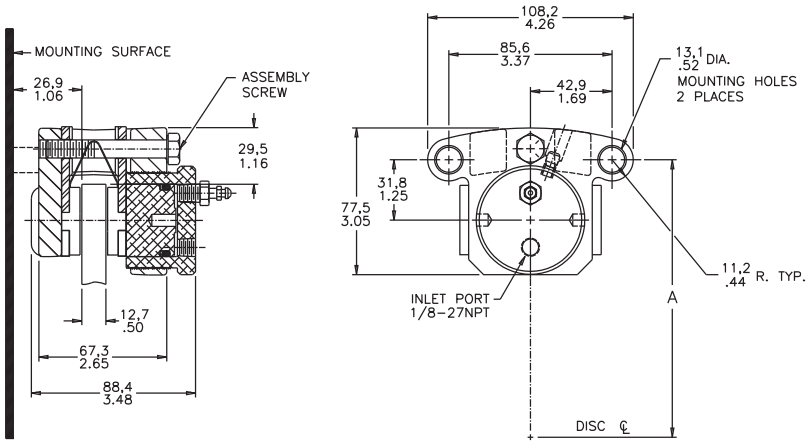

millimeters
inches

"A" dimension = Disc Radius + 9,7 / 0.38

NOTES:
1. Model 02-515-025 shown, dimensions will vary slightly between units and are to be used for reference purposes only.
2. Disc rubbing speed not to exceed 5000 ft/min if brake is used dynamically.
3. Mounting bolts not included.

520 Series Caliper Disc Brake

Model Numbers

Brake Fluid	Hydraulic Oil
02-520-151	02-520-152

SPECIFICATIONS

- **Disc diameter:** 9 inch to unlimited
- **Disc thickness:** 0.25 inch minimum
- **Total lining contact area:** 8.88 inch^2
- **Continuous duty pressure:** 1500 PSI
- **Intermittent duty pressure:** 2000 PSI
- **Actuating volume:** 0.30 inch^3 nominal
- **Caliper material:** ductile iron
- **Caliper finish:** zinc chromate
- **Lining thickness:** 0.56 inch
- **Usable lining thickness:** 0.48 inch
- **Lining material:** non-asbestos, lead free
- **Piston diameter:** 2.50 inch
- **Approximate weight:** 16 lb
- **Porting:** 1/8-27NPTF

DESCRIPTION

Fixed caliper disc brake, hydraulic apply with opposed hardcoat anodized aluminum pistons. The split caliper disc brakes are mounted using a spacer or torque member between the caliper halves. These brakes can also be purchased as a single caliper half assembly. In either case, the customer supplies fittings, tubing assembly, hardware, and spacer.

Designed for medium torque, drive line mounted, and stationary equipment applications.

Consult MICO Applications Department for other models.

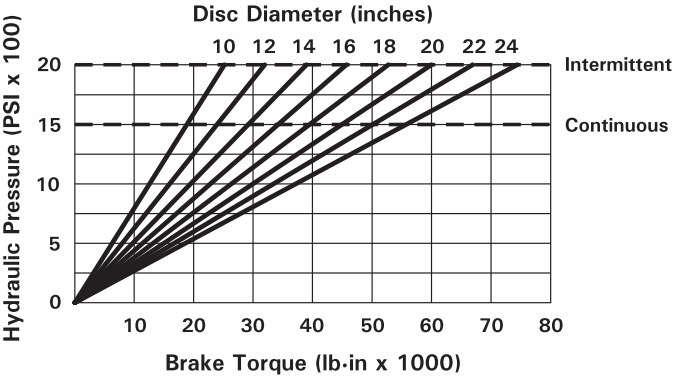

TORQUE FORMULA (Bt = Brake Torque)
Bt = PSI x 3.43 x (Disc Radius – 1.25) for hole

NOTE: Maximum torque achieved only after brake has been properly adjusted and burnished, see Technical Notice (Form No. 81-950-016).

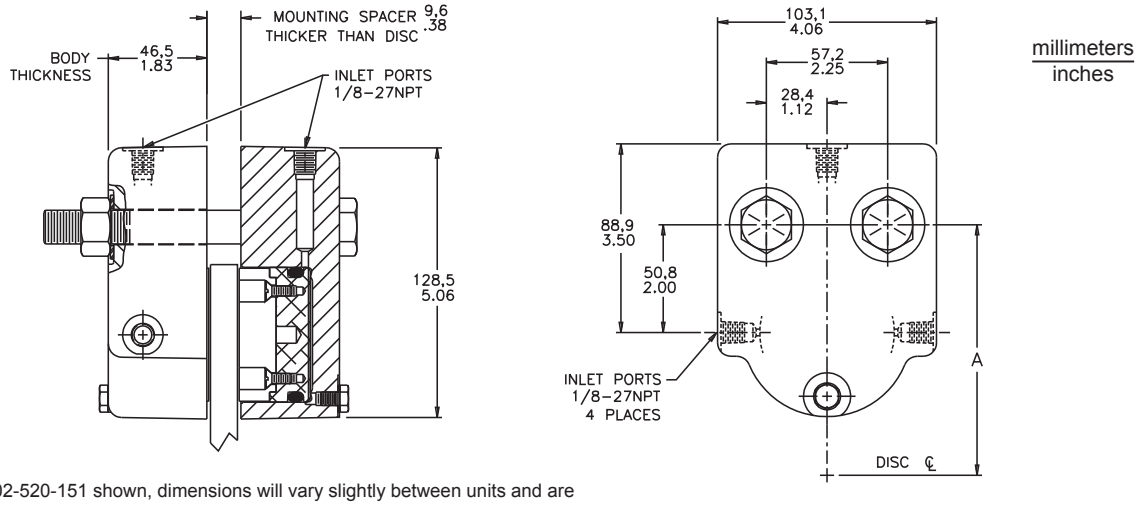

NOTES:
1. Model 02-520-151 shown, dimensions will vary slightly between units and are to be used for reference purposes only.
2. Disc rubbing speed not to exceed 5000 ft/min.
3. Mounting bolts not included.

"A" dimension = Disc Radius + 16,0 0.63

520 Series Caliper Disc Brake

Model Numbers

Brake Fluid	Hydraulic Oil
02-520-201	02-520-202

DESCRIPTION

Fixed caliper disc brake, hydraulic apply with opposed pistons. Split calipers with one piston per caliper half.

Brake torque is transmitted directly to the housing protecting the piston from side loads. Dust boot and o-ring seal protects hardcoat anodized aluminum piston from contaminants. Features quick-change type linings and internal porting.

Applications include pivotal steering assists, winch clutches, drivelines, various vehicles, and equipment requiring fade-free braking.

Consult MICO Applications Department for other models.

SPECIFICATIONS

- **Disc diameter:** 10 to 24 inches
- **Disc thickness:** 0.50 inch
- **Total lining contact area:** 15.74 inch^2
- **Continuous duty pressure:** 1500 PSI
- **Intermittent duty pressure:** 2000 PSI
- **Actuating volume:**
  500 PSI / 0.32 inch^3
  1000 PSI / 0.37 inch^3
  1500 PSI / 0.45 inch^3
  2000 PSI / 0.54 inch^3
- **Caliper material:** aluminum
- **Caliper finish:** clear anodized
- **Lining thickness:** 0.37 inch
- **Usable lining thickness:** 0.37 inch
- **Lining material:** non-asbestos, lead free
- **Piston diameter:** 2.50 inch
- **Approximate weight:** 10 lb
- **Porting:** No. 4 SAE o-ring port per SAE J1926/1: 7/16-20

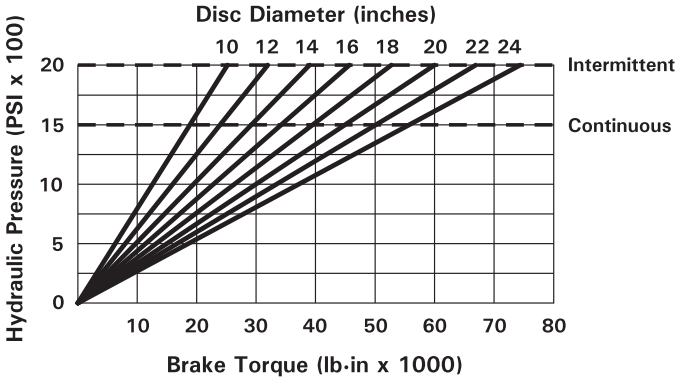

TORQUE FORMULA (Bt = Brake Torque)
Bt = PSI x 3.43 x (Disc Radius – 1.25)

NOTE: Maximum torque achieved only after brake has been properly adjusted and burnished, see Technical Notice (Form No. 81-950-016).

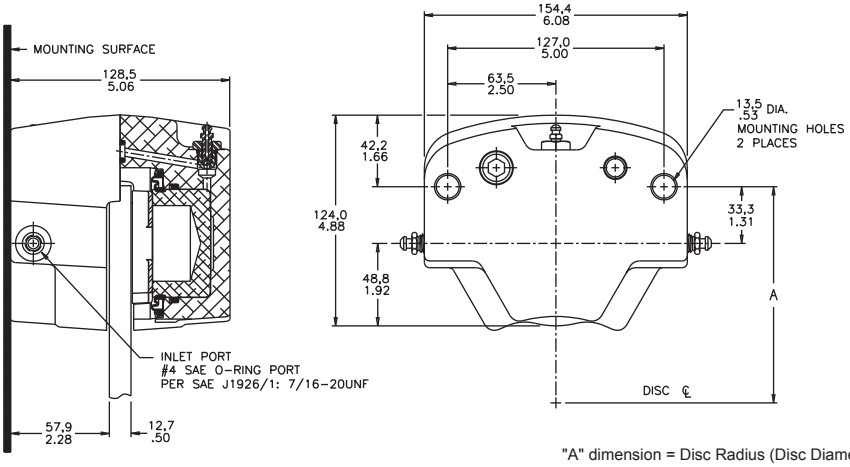

millimeters
inches

NOTES:
1. Model 02-520-201 shown, dimensions will vary slightly between units and are to be used for reference purposes only.
2. Disc rubbing speed not to exceed 5000 ft/min.
3. Mounting bolts not included.

"A" dimension = Disc Radius (Disc Diameter 10 to 12 inch)

"A" dimension = Disc Radius + $\frac{3.3}{0.13}$ (Disc Diameter greater than 12 to 18 inch)

"A" dimension = Disc Radius + $\frac{4.8}{0.19}$ (Disc Diameter greater than 18 to 24 inch)

520 Series Caliper Disc Brake

Model Numbers

Brake Fluid	Hydraulic Oil
02-520-261 02-520-265	02-520-260

SPECIFICATIONS

- **Disc diameter:** 12 to 36 inch (consult MICO, Inc. for larger sizes)
- **Disc thickness:** 0.50 inch 02-520-260
0.50 inch 02-520-261
1.00 inch 02-520-265
- **Total lining contact area:** 33.63 inch^2
- **Continuous duty pressure:** 2000 PSI
- **Intermittent duty pressure:** 2500 PSI
- **Actuating volume:**
500 PSI / 0.38 inch^3
1000 PSI / 0.49 inch^3
1500 PSI / 0.59 inch^3
2000 PSI / 0.68 inch^3
2500 PSI / 0.79 inch^3
- **Caliper material:** ductile iron
- **Caliper finish:** electroless nickel
- **Lining thickness:** 0.37 inch
- **Usable lining thickness:** 0.37 inch
- **Lining material:** non-asbestos, lead free
- **Piston diameter:** 3.50 inch
- **Porting:** No. 4 SAE o-ring port per SAE J1926/1: 7/16-20
- **Approximate weight:** 22 lb

DESCRIPTION

Fixed caliper, hydraulic apply with opposed pistons.

Flexibility of the split caliper design makes it possible to use a variety of disc thicknesses. This design also allows the brake to be mounted with the torque member between the caliper halves. In this case the torque member serves as the spacer.

Designed for use with vehicles or stationary equipment requiring fade-free braking. Also available as caliper half assembly, contact MICO, Inc.

Consult MICO Applications Department for other models.

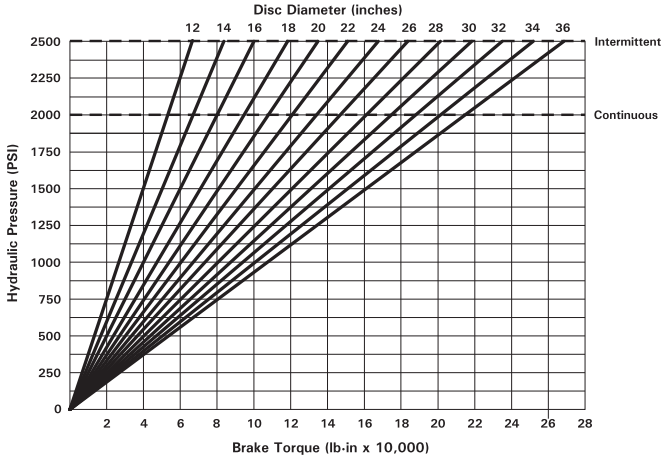

TORQUE FORMULA (Bt = Brake Torque)

Bt = PSI x 6.72 x (Disc Radius – 2.00)

NOTE: Maximum torque achieved only after brake has been properly adjusted and burnished, see Technical Notice (Form No. 81-950-016).

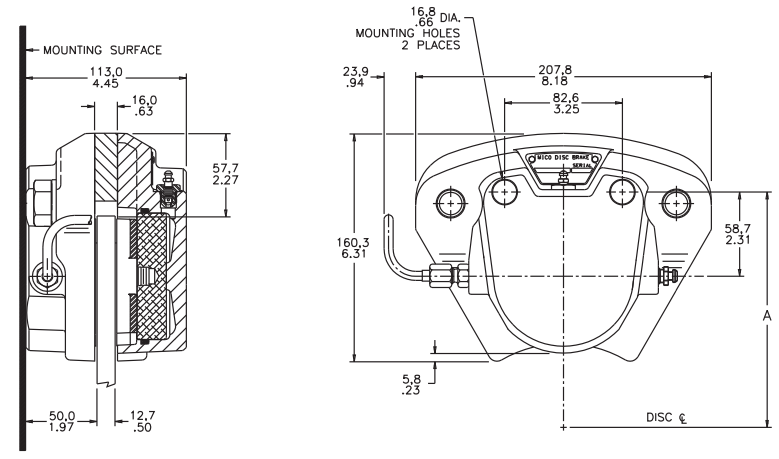

millimeters
inches

NOTES:

1. Model 02-520-260 shown, dimensions will vary slightly between units and are to be used for reference purposes only.
2. Disc rubbing speed not to exceed 5000 ft/min.
3. Mounting bolts not included.

"A" dimension = Disc Radius + $\frac{15,8}{0.62}$

520 Series Caliper Disc Brake

Model Numbers

Brake Fluid	Hydraulic Oil
03-520-281	03-520-282

DESCRIPTION

Fixed caliper, hydraulic apply with opposed pistons. One piece single caliper with internally ported fluid passages to both hardcoat anodized aluminum pistons.

Consult MICO Applications Department for other models.

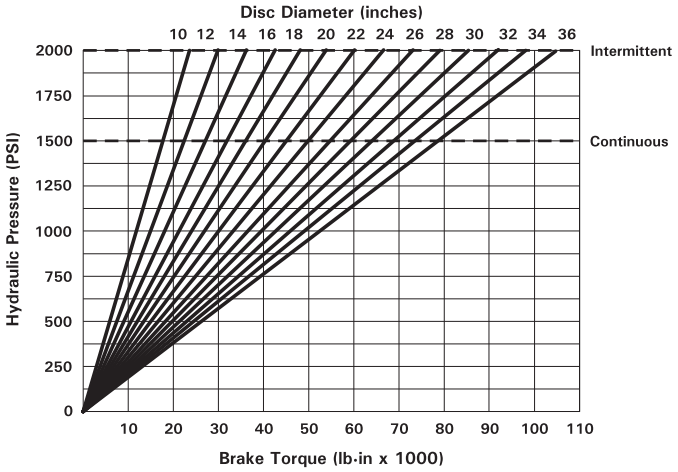

SPECIFICATIONS

- **Disc diameter:** 9 to 36 inch
- **Disc thickness:** 0.50 inch
- **Total lining contact area:** 7.82 inch^2
- **Continuous duty pressure:** 1500 PSI
- **Intermittent duty pressure:** 2000 PSI
- **Actuating volume:**
  500 PSI / 0.30 inch^3
  1000 PSI / 0.40 inch^3
  1500 PSI / 0.43 inch^3
  2000 PSI / 0.48 inch^3
- **Caliper material:** ductile iron
- **Caliper finish:** zinc chromate yellow
- **Lining thickness:** 0.50 inch
- **Usable lining thickness:** 0.44 inch
- **Lining material:** non-asbestos, lead free
- **Porting:** No. 4 SAE o-ring port per SAE J1926/1: 7/16-20
- **Approximate weight:** 14 lb

TORQUE FORMULA (Bt = Brake Torque)
Bt = PSI x 3.09 x (Disc Radius – 1.187)

NOTE: Maximum torque achieved only after brake has been properly adjusted and burnished, see Technical Notice (Form No. 81-950-016).

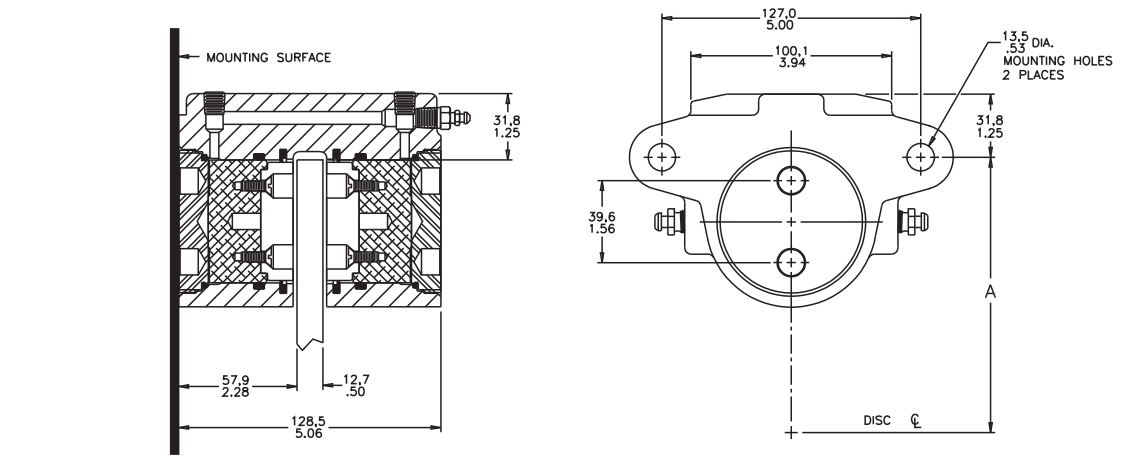

NOTES:
1. Model 03-520-281 shown, dimensions will vary slightly between units and are to be used for reference purposes only.
2. Disc rubbing speed not to exceed 5000 ft/min.
3. Mounting bolts not included.

"A" dimension = Disc Radius

520 Series Caliper Disc Brake

Model Number

Hydraulic Oil

02-520-300

DESCRIPTION

This 520 Series MICO Brake is used in service braking applications. It uses a modulated hydraulic pressure source, such as a master cylinder, to control brake torque. The brake can also be mounted in virtually any position. The cross-over tube allows hydraulic pressure to the two caliper halves to actuate the piston in each half. This brake has a lining retractor mechanism which reduces unnecessary lining wear by maintaining a constant lining to rotor disc clearance distance while the brake is not applied.

Consult MICO Applications Department for other models.

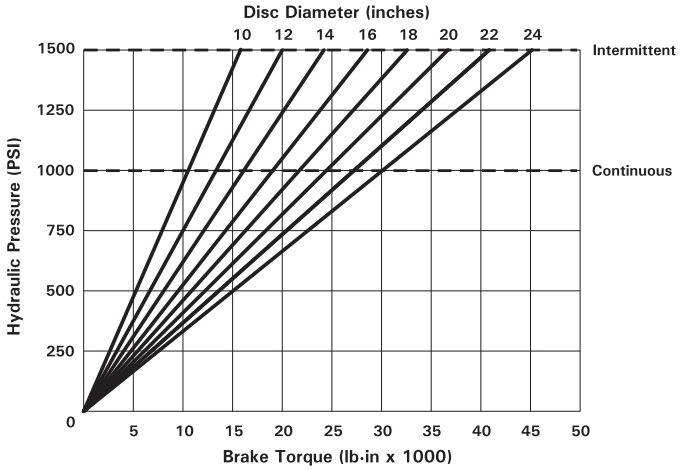

SPECIFICATIONS

- **Disc diameter:** 10 inch to unlimited
- **Disc thickness:** 1.00 inch
- **Total lining contact area:** 12.4 inch^2
- **Continuous duty pressure:** 1000 PSI
- **Intermittent duty pressure:** 1500 PSI
- **Actuating volume:** 0.25 in^2
- **Caliper material:** ductile iron
- **Caliper finish:** vinyl primer
- **Lining thickness:** 0.66 inch
- **Usable lining thickness:** 0.32 inch
- **Lining material:** non-asbestos, lead free
- **Piston diameter:** 2.25 inch
- **Porting:** #4 SAE o-ring port per SAE J1926/1: 7/16-20
- **Approximate weight:** 17 lb

TORQUE FORMULA (Bt = Brake Torque)
Bt = PSI x 2.78 x (Disc Radius – 1.20)

NOTE: Maximum torque achieved only after brake has been properly adjusted and burnished, see Technical Notice (Form No. 81-950-016).

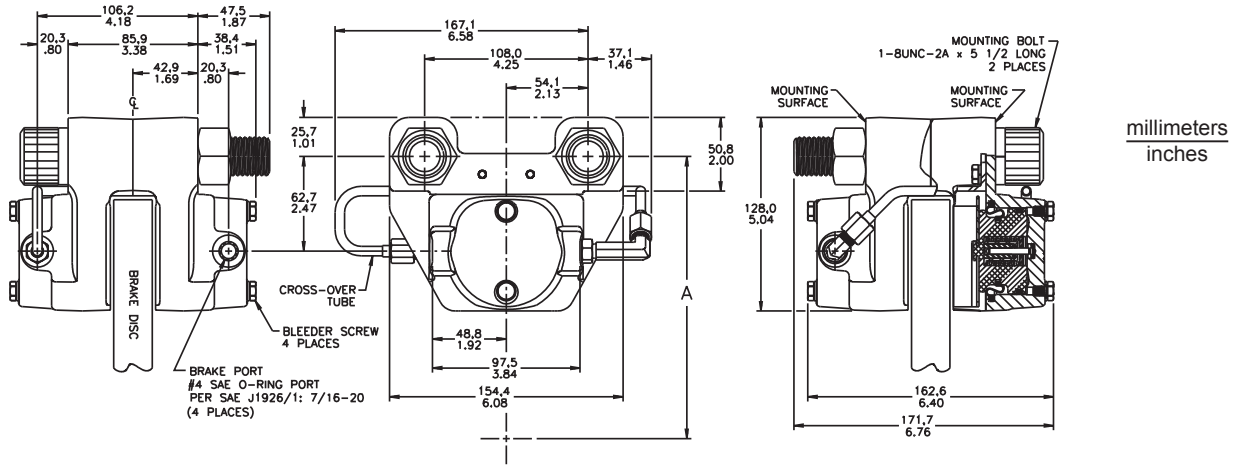

"A" dimension = Disc Radius + $\frac{25,4}{1.00}$ Minimum

NOTE:
Disc rubbing speed not to exceed 5000 ft/min.

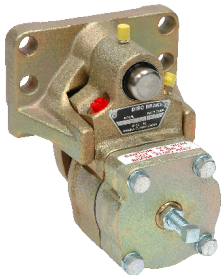

530 Series Caliper Disc Brake

(3000 lb)

Model Numbers

Brake Fluid	Hydraulic Oil
* 01-530-307	* 01-530-306
02-530-307	02-530-306
03-530-307	03-530-306

* No mounting bracket, contact MICO for mounting information.

DESCRIPTION

Floating caliper, spring apply, hydraulic release design. Caliper can be reversed on mounting bracket.

The brakes shown are designed to operate as parking and/or emergency brakes. If your application requires rapid cycling please consult MICO, Incorporated for recommendations.

Consult MICO Applications Department for other models.

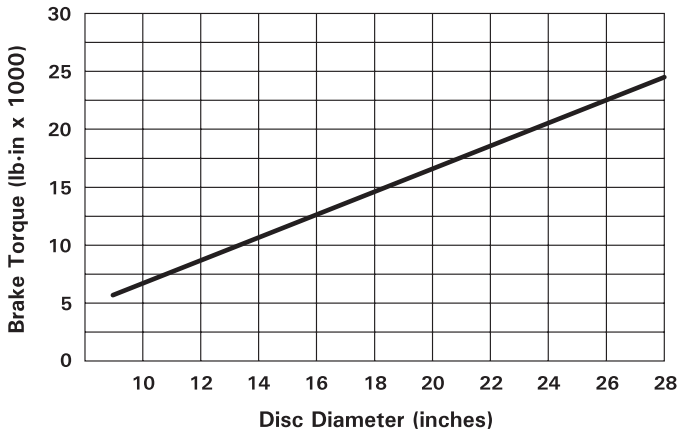

SPECIFICATIONS

- **Disc diameter:** 9 inch to unlimited
- **Disc thickness:** 0.31 to 0.50 inch
- **Total lining contact area:** 7.82 inch^2
- **Continuous duty pressure:** 2000 PSI
- **Intermittent duty pressure:** 2500 PSI
- **Full retraction volume:** 0.80 inch^3 maximum
- **Caliper material:** ductile iron
- **Caliper finish:** zinc chromate yellow
- **Lining thickness:** 0.37 inch
- **Usable lining thickness:** 0.28 inch
- **Lining material:** non-asbestos, lead free
- **Piston diameter:** 3.50 inch
- **Porting:** No. 4 SAE o-ring port per SAE J1926/1: 7/16-20
- **Approximate weight:** 20 lb

MOUNTING STYLES

02-530-306
02-530-307

03-530-306
03-530-307

(See page 14 for dimensions)

TORQUE FORMULA (Bt = Brake Torque)
Bt = 1920 x (Disc Radius – 1.18)
Complete Retraction Pressure: 1000 PSI

NOTE: Maximum torque achieved only after brake has been properly adjusted and burnished, see Technical Notice (Form No. 81-950-016).

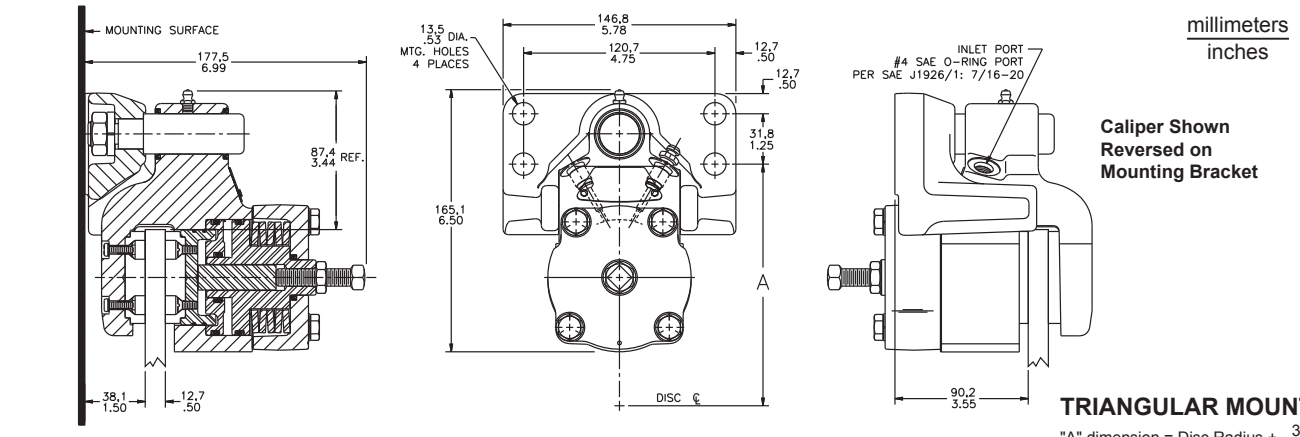

TRIANGULAR MOUNT

"A" dimension = Disc Radius + $\frac{3,1}{0.12}$

NOTES:

1. Model 02-530-306 shown, dimensions will vary slightly between units and are to be used for reference purposes only.
2. Disc rubbing speed not to exceed 5000 ft/min if brake is used dynamically.
3. Mounting bolts not included.

RECTANGULAR MOUNT

"A" dimension = Disc Radius + $\frac{41,2}{1.62}$ (for 9 to 15 inch Diameter Discs)

"A" dimension = Disc Radius + $\frac{44,5}{1.75}$ (for greater than 15 inch to unlimited Diameter Discs)

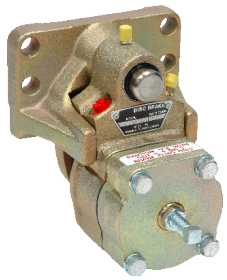

530 Series Caliper Disc Brake

(6000 lb)

Model Numbers

Brake Fluid	Hydraulic Oil
* 01-530-629	* 01-530-628
02-530-629	02-530-628
03-530-629	03-530-628

* No mounting bracket, contact MICO for mounting information.

DESCRIPTION

Floating caliper, spring apply, hydraulic release design. Caliper can be reversed on mounting bracket.

The brakes shown are designed to operate as parking and/or emergency brakes. If your application requires rapid cycling please consult MICO, Inc. for recommendations.

Consult MICO Applications Department for other models.

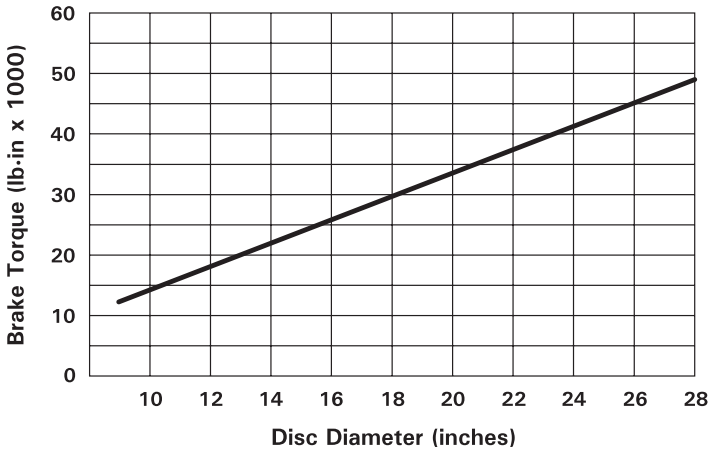

TORQUE FORMULA (Bt = Brake Torque)
Bt = 3840 x (Disc Radius – 1.18)
Complete Retraction Pressure: 1500 PSI

SPECIFICATIONS

- **Disc diameter:** 9 inch to unlimited
- **Disc thickness:** 0.31 to 0.50 inch
- **Total lining contact area:** 7.82 inch^2
- **Continuous duty pressure:** 2000 PSI
- **Intermittent duty pressure:** 2500 PSI
- **Full retraction volume:** 0.80 inch^3 maximum
- **Caliper material:** ductile iron
- **Caliper finish:** zinc chromate yellow
- **Lining thickness:** 0.37 inch
- **Usable lining thickness:** 0.28 inch
- **Lining material:** non-asbestos, lead free
- **Porting:** No. 4 SAE o-ring port per SAE J1926/1: 7/16-20
- **Approximate weight:** 20 lb

MOUNTING STYLES

02-530-628
02-530-629
(See page 13 for dimensions)

03-530-628
03-530-629

NOTE: Maximum torque achieved only after brake has been properly adjusted and burnished, see Technical Notice (Form No. 81-950-016).

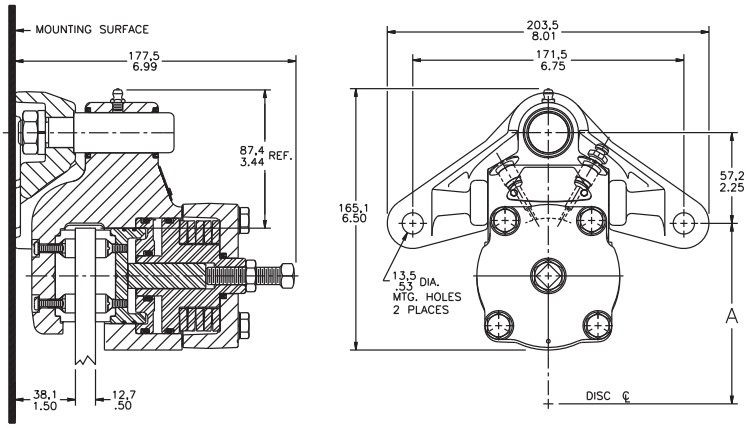

millimeters
inches

Caliper Shown Reversed on Mounting Bracket

TRIANGULAR MOUNT
"A" dimension = Disc Radius + $\frac{3,1}{0.12}$

NOTES:
1. Model 03-530-628 shown, dimensions will vary slightly between units and are to be used for reference purposes only.
2. Disc rubbing speed not to exceed 5000 ft/min if brake is used dynamically.
3. Mounting bolts not included.

RECTANGULAR MOUNT
"A" dimension = Disc Radius + $\frac{41,2}{1.62}$ (for 9 to 15 inch Diameter Discs)

"A" dimension = Disc Radius + $\frac{44,5}{1.75}$ (for greater than 15 inch to unlimited Diameter Discs)

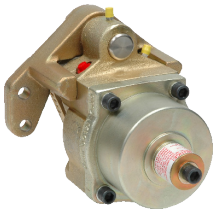

530 Series Caliper Disc Brake

(9000 lb)

Model Numbers

Hydraulic Oil

* 01-530-904
03-530-904

* No mounting bracket, contact MICO for mounting information.

DESCRIPTION

Floating caliper, spring apply, hydraulic release design.

The brake shown is designed to operate as parking and/or emergency brake. If your application requires rapid cycling please consult MICO, Inc. for recommendations.

Consult MICO Applications Department for other models.

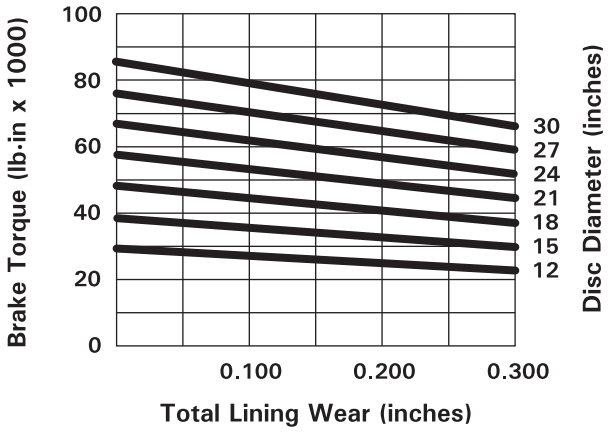

SPECIFICATIONS

- **Disc diameter:** 9 inch to unlimited
- **Disc thickness:** 0.50 inch
- **Total lining contact area:** 9.40 inch^2
- **Continuous duty pressure:** 2000 PSI
- **Intermittent duty pressure:** 2500 PSI
- **Full retraction volume:** 4.53 inch^3 maximum
- **Caliper material:** ductile iron
- **Caliper finish:** zinc chromate yellow
- **Usable lining thickness:** 0.15 inch
- **Lining material:** non-asbestos, lead free
- **Porting:** No. 4 SAE o-ring port per SAE J1926/1: 7/16-20
- **Approximate weight:** 37 lb

TORQUE FORMULA (Bt = Brake Torque)

Bt (new) = 6225 x (Disc Radius – 1.31)

Bt (worn = 4895 (Disc Radius – 1.31)

Complete Retraction Pressure: 1000 PSI

NOTE: Maximum torque achieved only after brake has been properly adjusted and burnished, see Technical Notice (Form No. 81-950-016).

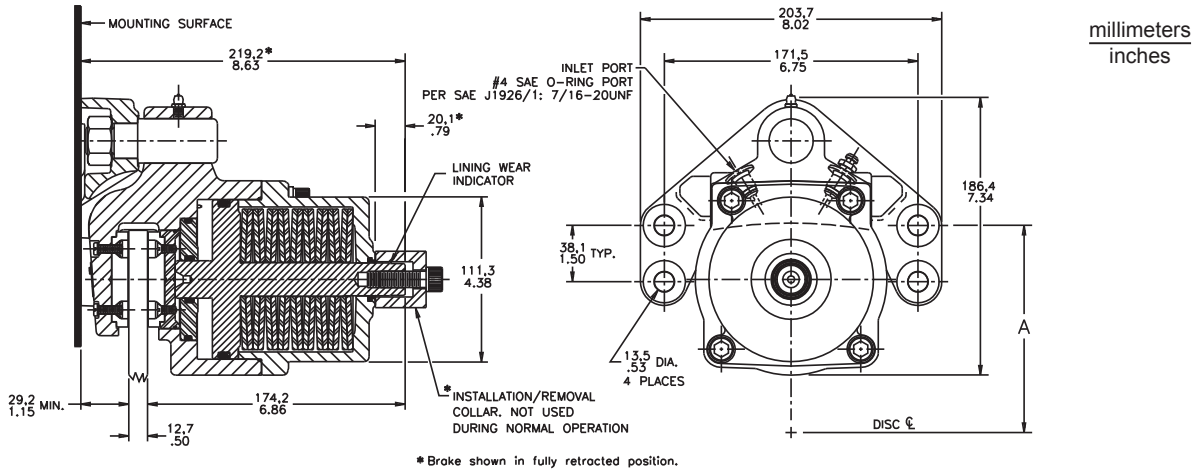

NOTES:

1. Model 03-530-904 shown, dimensions will vary slightly between units and are to be used for reference purposes only.
2. Disc rubbing speed not to exceed 5000 ft/min if brake is used dynamically.
3. Mounting bolts not included.

"A" dimension = Disc Radius + 0.13

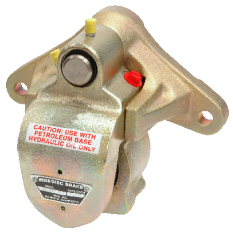

530 Series Caliper Disc Brake

Model Numbers

Brake Fluid	Hydraulic Oil
* 01-530-045	* 01-530-040
02-530-045	02-530-040
03-530-045	03-530-040

* No mounting bracket, contact MICO for mounting information.

DESCRIPTION

Floating caliper, hydraulic apply design. Caliper may be reversed on mounting bracket.

Consult MICO Applications Department for other models.

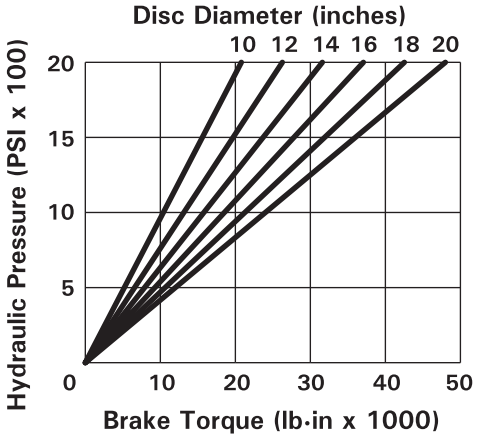

SPECIFICATIONS

- **Disc diameter:** 9 inch to unlimited
- **Disc thickness:** 0.50 inch
- **Total lining contact area:** 7.82 inch^2
- **Continuous duty pressure:** 1500 PSI
- **Intermittent duty pressure:** 2000 PSI
- **Caliper material:** ductile iron
- **Caliper finish:** zinc chromate yellow
- **Lining thickness:** 0.37 inch
- **Usable lining thickness:** 0.30 inch
- **Lining material:** non-asbestos, lead free
- **Porting:** No. 4 SAE o-ring port per SAE J1926/1: 7/16-20
- **Approximate weight:** 16 lb

MOUNTING STYLES

02-530-040
02-530-045

03-530-040
03-530-045
(See page 14 for dimensions)

TORQUE FORMULA (Bt = Brake Torque)
Bt = PSI x 2.72 x (Disc Radius – 1.18)

NOTE: Maximum torque achieved only after brake has been properly adjusted and burnished, see Technical Notice (Form No. 81-950-016).

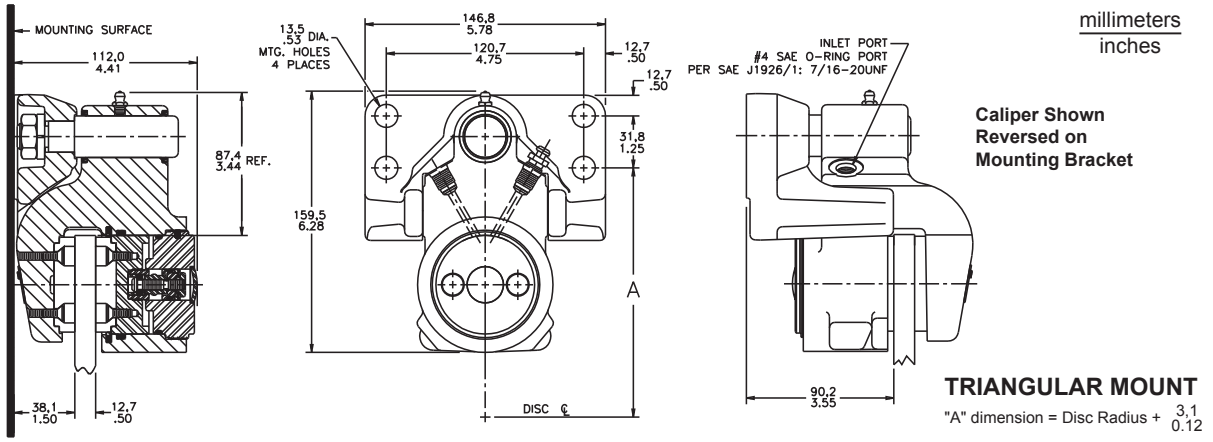

TRIANGULAR MOUNT
"A" dimension = Disc Radius + $\frac{3,1}{0.12}$

NOTES:
1. Model 03-530-045 shown, dimensions will vary slightly between units and are to be used for reference purposes only.
2. Disc rubbing speed not to exceed 5000 ft/min if brake is used dynamically.
3. Mounting bolts not included.

RECTANGULAR MOUNT
"A" dimension = Disc Radius + $\frac{41,2}{1.62}$ (for 9 to 15 inch Diameter Discs)

"A" dimension = Disc Radius + $\frac{44,5}{1.75}$ (for greater than 15 inch to unlimited Diameter Discs)

USEFUL FORMULAS

See page 18 for conversion factors.

NOTES:

1. To convert a known percent of grade into the sine of the angle of the grade, see table on page 19.
2. The formulas shown on this page estimate torque and energy requirements and may be helpful with brake selection, however, many factors affect brake performance and are not considered in the equations. Some of these factors are:
   - road conditions
   - tire performance
   - engine drag
   - vehicle inertia
   - duty cycle
   - disc speed
   - lining wear
   - environment

Contact MICO, Inc. for a basic recommendation.

Vehicle Application

Torque Required to Hold a Vehicle on an Incline

$$T = WR\sin\theta$$

Where:
T = Total torque required (lb·in)
W = Gross vehicle weight (lb)
R = Rolling radius (in)
sin θ = Sine of the angle of the grade (See Note 1)

Torque Required to Stop a Moving Vehicle

$$T = WR\left(\frac{d}{g} + \sin\theta\right)$$

Where:
T = Total torque required (lb·in)
W = Gross vehicle weight (lb)
R = Rolling radius (in)
sin θ = Sine of the angle of the grade (See Note 1)
g = Acceleration due to gravity (32.2 ft/sec^2)
d = Deceleration rate (ft/sec^2)

And:

$$d = \frac{V^2}{2s} = \frac{V}{t}$$

Where:
V = Vehicle velocity at instant of brake application (ft/sec)
s = Stopping distance (ft)
t = Stopping time (sec)

Torque Required per Brake

$$Bt = \frac{T}{NB}$$

Where:
Bt = Torque required per brake (lb·in)
T = Total torque required (lb·in)
NB = Number of brakes

Torque Required if Gear Reduction is Used

$$Bt = \frac{T}{GR}$$

Where:
Bt = Brake torque required (lb·in)
T = Total torque required (lb·in)
GR = Gear reduction ratio

Kinetic Energy Required to Stop a Moving Vehicle

$$KE = \frac{WV^2}{2g}$$

Where:
KE = Kinetic energy (ft·lb)
W = Gross vehicle weight (lb)
V = Vehicle speed (ft/sec)
g = Acceleration due to gravity (32.2 ft/sec^2)

Stationary Equipment Application

Torque Required to Stop a Rotating Mass

$$T = \frac{0.039WK^2N}{t}$$

Where:
T = Torque (lb·in)
W = Weight of rotating members (lb)
K = Radius of gyration of rotating members (ft)
N = RPM
t = Stopping time required (sec)

Kinetic Energy Required to Stop a Rotating Mass

$$KE = \frac{WK^2N^2}{5872}$$

Where:
KE = Kinetic energy (ft·lb)
W = Weight of rotating member (lb)
K = Radius of gyration of rotating member (ft)
N = RPM

Constant Drag Application

$$T = \frac{63{,}025\ hp}{N}$$

Where:
T = Total torque required (lb·in)
hp = Horsepower
N = RPM

CONVERSION FACTORS

TORQUE

lb·ft	lb·in	daN·m	N·m	kg·m
1	12	0.13556	1.356	0.1382
0.08333	1	0.01130	0.1130	0.01152
7.376	88.51	1	10	1.019
0.7376	8.851	0.1	1	0.102
7.2359	86.80	0.9806	9.806	1

PRESSURE

PSI	MPa	bar	kPa	kg/mm²	kg/cm²
1	0.006895	0.06895	6.895	0.0007031	0.07031
145	1	10	1000	0.102	10.20
14.50	0.1	1	100	0.0102	1.02
0.145	0.001	0.01	1	0.000102	0.0102
1422	9.807	98.07	9807	1	100
14.22	0.09807	0.9807	98.07	0.01	1

1 Atmosphere = 14.7 lb/in²
1 Atmosphere = 29.92 inches of Mercury
1 Atmosphere = 33.96 ft of water
1 inch of Mercury = 0.491 lb/in² = 13.6 inches of water
1 PSI = 2.0416 inches of Mercury at 62 °F

ENEGRY

ft·lb	kgf·m	kW·hr	hp·hr	J
1	0.1383	3.766e-7	5.051e-7	1.356
7.233	1	2.724e-6	3.653e-6	9.806
2655224	367098	1	1.341	3600000
1980000	273745	0.7457	1	2684520
0.7376	0.1020	2.778e-7	3.725e-7	1

1 BTU = British thermal unit = heat required to raise temperature of 1 lb of water 1 °F
1 BTU = 778.17 ft·lb

VELOCITY

m/sec	ft/s	km/hr	MPH	ft/min
1	3.281	3.6	2.237	196.85
0.3048	1	1.097	0.6818	60
0.2778	0.9113	1	0.6214	54.68
0.4470	1.467	1.609	1	88
0.00508	0.01667	0.01829	0.01136	1

LENGTH

cm	in	ft	m	km	mile
1	0.3937	0.03281	0.01	0.00001	0.000006
2.54	1	0.08333	0.0254	0.000024	0.000017
30.48	12	1	0.3048	0.0003	0.000186
100	39.37	3.281	1	0.001	0.000621
100,000	39,370	3281	1000	1	0.6214
160,934	63,360	5280	1609	1.609	1

VOLUME

in³	cm³	L	qt
1	16.39	0.01639	0.01732
0.06102	1	0.001	0.001057
61.02	1000	1	1.057
57.75	946.4	0.9464	1

1 U.S. gallon = 231 in³
1 U.S. gallon = 0.13368 ft³

FLOW

GPM	in³/s	L/min
1	3.850	3.785
0.260	1	0.983
0.264	1.017	1

FORCE

N	lb
1	0.2248
4.4482	1

ACCELERATION

ft/s²	in/s²	m/s²	cm/s²
1	12	0.3048	30.48
0.08333	1	0.0254	2.54
3.281	39.37	1	100
0.03281	3937	0.01	1

AREA

in²	cm²	mm²
1	6.452	645.2
0.1550	1	100
0.001550	0.01	1

POWER

hp	kW	met·hp
1	0.7457	1.014
1.341	1	1.360
0.9863	0.7355	1

1 hp = 550 ft·lb/s
1 hp = 33,000 ft·lb/min
1 hp = 42.44 BTU/min

TEMPERATURE

°F = (°C x 1.8) + 32
°C = (°F - 32) ÷ 1.8

continued . . .

GRADE

Percent of Grade	θ (Degrees)	sin θ
1	0° 34'	0.0100
2	1° 09'	0.0200
3	1° 43'	0.0300
4	2° 17'	0.0400
5	2° 52'	0.0499
6	3° 26'	0.0599
7	4° 00'	0.0698
8	4° 34'	0.0797
9	5° 09'	0.0896
10	5° 43'	0.0995
11	6° 17'	0.1093
12	6° 51'	0.1191
13	7° 24'	0.1289
14	7° 58'	0.1386
15	8° 32'	0.1483
16	9° 05'	0.1580
17	9° 39'	0.1676
18	10° 12'	0.1772

Percent of Grade	θ (Degrees)	sin θ
19	10° 45'	0.1867
20	11° 19'	0.1961
21	11° 52'	0.2055
22	12° 24'	0.2149
23	12° 57'	0.2241
24	13° 30'	0.2334
25	14° 02'	0.2425
26	14° 34'	0.2516
27	15° 07'	0.2607
28	15° 39'	0.2696
29	16° 10'	0.2785
30	16° 42'	0.2873
35	19° 17'	0.3304
40	21° 48'	0.3714
45	24° 14'	0.4104
50	26° 34'	0.4472
55	28° 49'	0.4819
60	30° 58'	0.5145

MICO®

a WABCO company

BRAKES

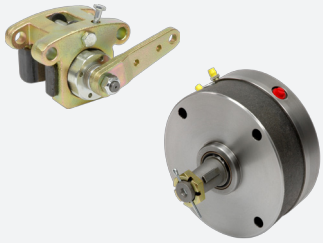

HYDRAULIC OVER AIR RELAY VALVES

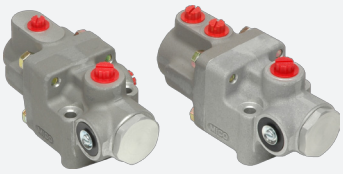

ELECTROHYDRAULIC VALVES

ACCUMULATOR CHARGING VALVES

MODULATING BRAKE VALVES

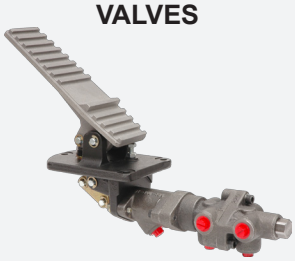

QUADRIGAGE™

FLUID RESERVOIRS

ELECTRONIC PEDALS

REMOTE ACTUATORS

Learn more about MICO Products at:

www.mico.com

NOTES

NOTES

MICO, Incorporated
1911 Lee Boulevard
North Mankato, MN, U.S.A. 56003-2507
Tel: +1 507 625 6426 **Fax:** +1 507 625 3212

Web Site: www.mico.com

MICO is a trademark and registered trademark of MICO, Inc. MICO is registered in the U.S. Patent and Trademark Office as well as in Australia, Canada, Indonesia, Japan, Peoples Republic of China, South Korea, and the European Community.

PRODUCT LINE:

Brakes
Caliper Disc Brakes
Multiple Disc Brakes

Brake Locks
Electric
Mechanical

Controls
Electronic Controls
Hydraulic Throttle Controls
Pedal Controls
Switches
Transducers/Sensors

Cylinders
Drive Axle Brake Actuators
Slave Cylinders
Wheel Cylinders

Master Cylinders
Boosted Cylinders
Hydraulically and Air Actuated
Straight Bore Cylinders
Two-Stage Cylinders

Valves
Accumulator Charging
Electrohydraulic Brake
Park Brake
Pressure Modulating

Miscellaneous Components
In-line Residual Check Valves
Pump with Integrated Valves
Reservoirs

Form No. 84-515-535 Online Revised 2020-10-22 Printed in U.S.A.